90VA, 20 HZ Modular Ringing Supply

Key Features

- **Modular Design**—permits easy addition or replacement without system shutdown
- **Only 5.25" (13.34cm) High**—compact design minimizes use of vertical rack space
- **Up To 90VA Capacity**—for a wide range of applications
- **Single or Redundant Operation**—to meet your requirements
- **Field-Adjustable Voltage and Frequency**—for special applications
- **LED Indicators**—provide easy system status review
- **Weighs 23 Lbs. (10.43 Kgs)**—reduces floor loading

Description

The Lorain® SFT5 20 Hz modular ringing supply is a compact, modular shelf unit that can be easily configured to provide up to 90VA ringing capacity from a -48 VDC source for a wide range of applications.

The modular design enables fast field expansion and simple replacement for service without system shutdown. The unit will accept up to three (3) model T45 ringing generator modules, which deliver a nominal 45VA output from the -48 VDC source. The T45 modules supply a single negative superimposed ringing output. The output frequency is 20 Hz ±1 Hz, and the output voltage is nominal 93 volts AC superimposed on 48 volts DC. Voltage and frequency are field-adjustable for special applications.

The unit is designed to operate over a wide ambient temperature range of -40° C to +65° C (-40° F to +149° F). It is also compact, measuring just 12" (30.48cm) deep and only 5.25" (13.34cm) high to minimize vertical space in a 23" (58.42cm) relay rack.

The SFT5 is equipped with an Alarm/Distribution Unit (ADU) that provides alarms and ringing distribution load fuses. Local "Power On" and "Output Fail" indicators are provided on the generator front panel. A failure condition will activate the indicators and extend an alarm to the ADU. Test jacks for checking the generator output voltage are conveniently located on the front panel.

Application

The SFT5 is a compact, environmentally hardened unit that makes it ideal for a wide range of applications including central office residual loads, digital loop carrier and feeder loop systems.

Additional Information

For additional specifications, engineering and installation information, specify model number and spec. number per configuration information on back page.

Marconi

90VA, 20 HZ Modular Ringing Supply

Configuration

Load A/B with Standby Generator — Dual Bus 90VA Redundant System

T45 Ringing Generator (Load A)	T45 Ringing Generator (Load A/B Standby)	T45 Ringing Generator (Load B)	ADU (Standard)

*Not required if input/output connectorized wiring is provided with OEM system.

(1) SFT5 mounting shelf, spec. number 585100800
(3) T45 ringing generator module, spec. number 487110200
(1)* Input/output connector kit, spec. number 421861100.

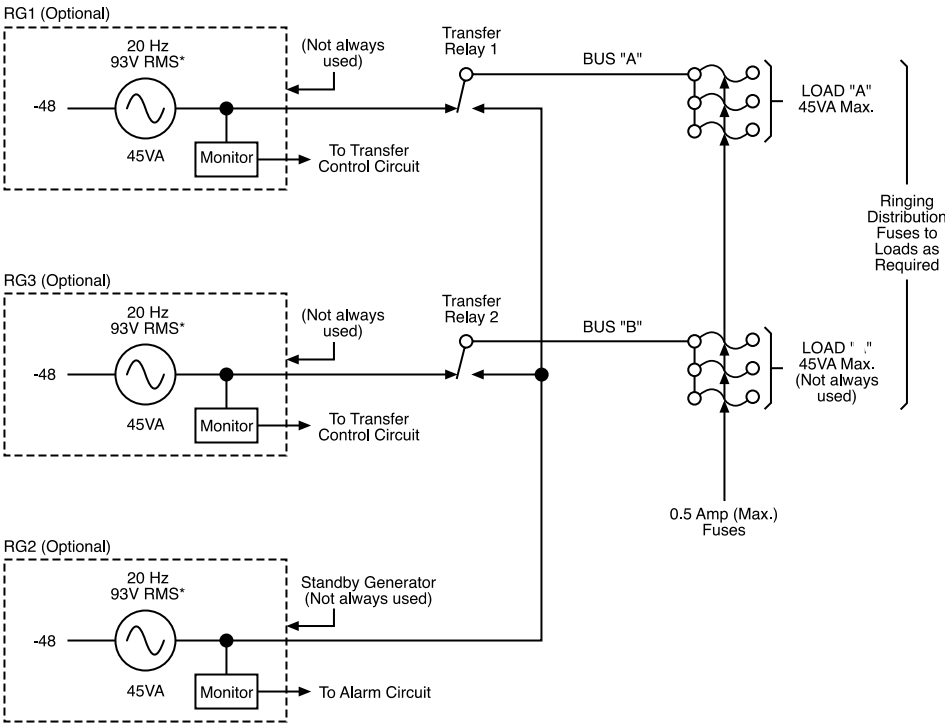

*Nominal Value (adjustable from 65 to 100V RMS and 15 to 67 Hz if local conditions require a different voltage or frequency setting). Output distribution fuses should not be increased above 0.5 amps to protect the integrity of the system.

System Input Current (Max. at -48 VDC)			
No. of Generators	Main	Standby	Total*
1	1.3A	0	1.4A
2	1.3A	0.23A	1.6A
3	2.6A	0.23A	2.9A

* Includes ADU operating current

www.marconi.com/power
Marconi Communications
1122 F Street
Lorain, OH 44052
800-800-1280
Fax: 440-246-4876

Lorain® is a trademark of Marconi Communications Inc.

© 2000 Marconi Communications Inc.
Printed in the USA. All rights reserved. Any unauthorized reproduction or transmission without the prior consent of Marconi Communications Inc. is prohibited.